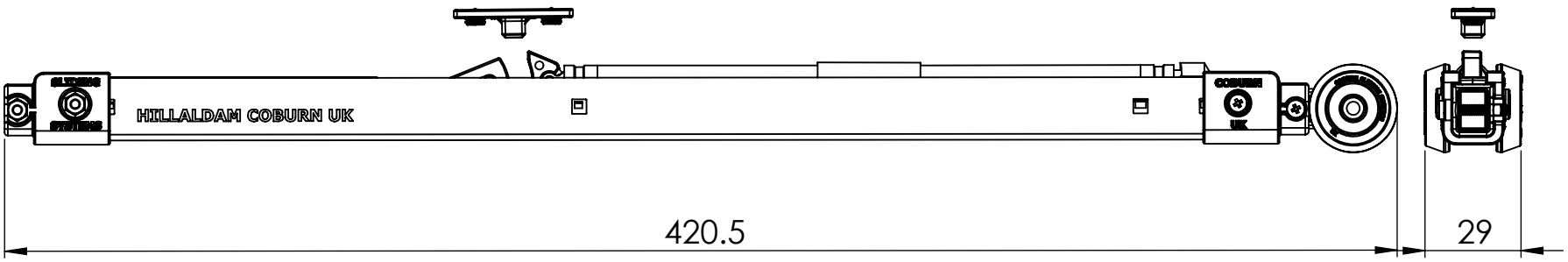

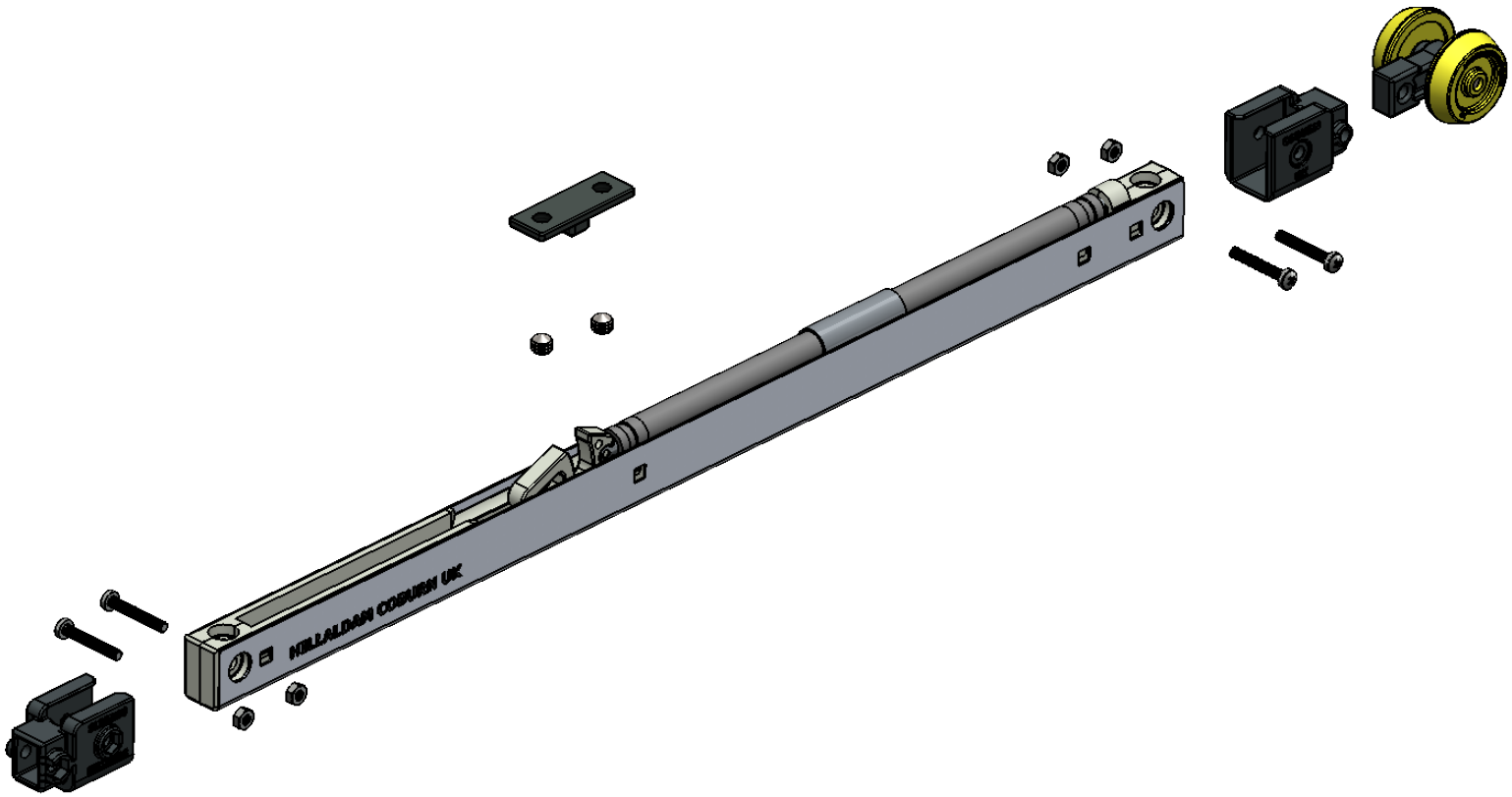

DO NOT SCALE
DIMENSIONS IN mm

FILE DRG No.
0 /00000 /000

UNLESS OTHERWISE SPECIFIED:

DIMENSION(mm)	**TOLERANCE**
ZERO PL DECIMAL	±0.2
ONE PL DECIMAL	±0.1
TWO PL DECIMAL	±0.05

ANGULAR TOLERANCE ±0.5°

FORGING TOLERANCE SEE BS 4114

SCALE 1:3

COBURN SLIDING SYSTEMS

COBURN SLIDIGN SYSTEMS LTD
UNIT 1, CARDINAL WEST
CARDINAL WAY, GODMANCHESTER
PE29 2XN, UK
TEL: +44 (02)0 8545 6680
FAX: +44 (02)0 8545 6723
e-mail: sales@coburn.co.uk
www.coburn.co.uk

COPYRIGHT COBURN SLIDING SYSTEMS LTD ©

THE INFORMATION CONTAINED IN THIS DRAWING IS THE SOLE PROPERTY OF < COBURN LTD>. ANY REPRODUCTION IN PART OR AS A WHOLE WITHOUT THE WRITTEN PERMISSION OF <COBURN SLIDING SYSTEMS LTD> IS PROHIBITED.

TITLE

STRAIGHTAWAY 130 SOFTCLOSER

MATERIAL

Nylon PA66

FINISH

Matt iron grey
RAL 7011

DRAWN	DATE
MUS	12/05/2014
CHECKED MUS	DATE 12/05/2014

SCALE:NTS SIZE: A4 SHEET:1/1

DRG/PART. No. **30614**

ISSUE 01