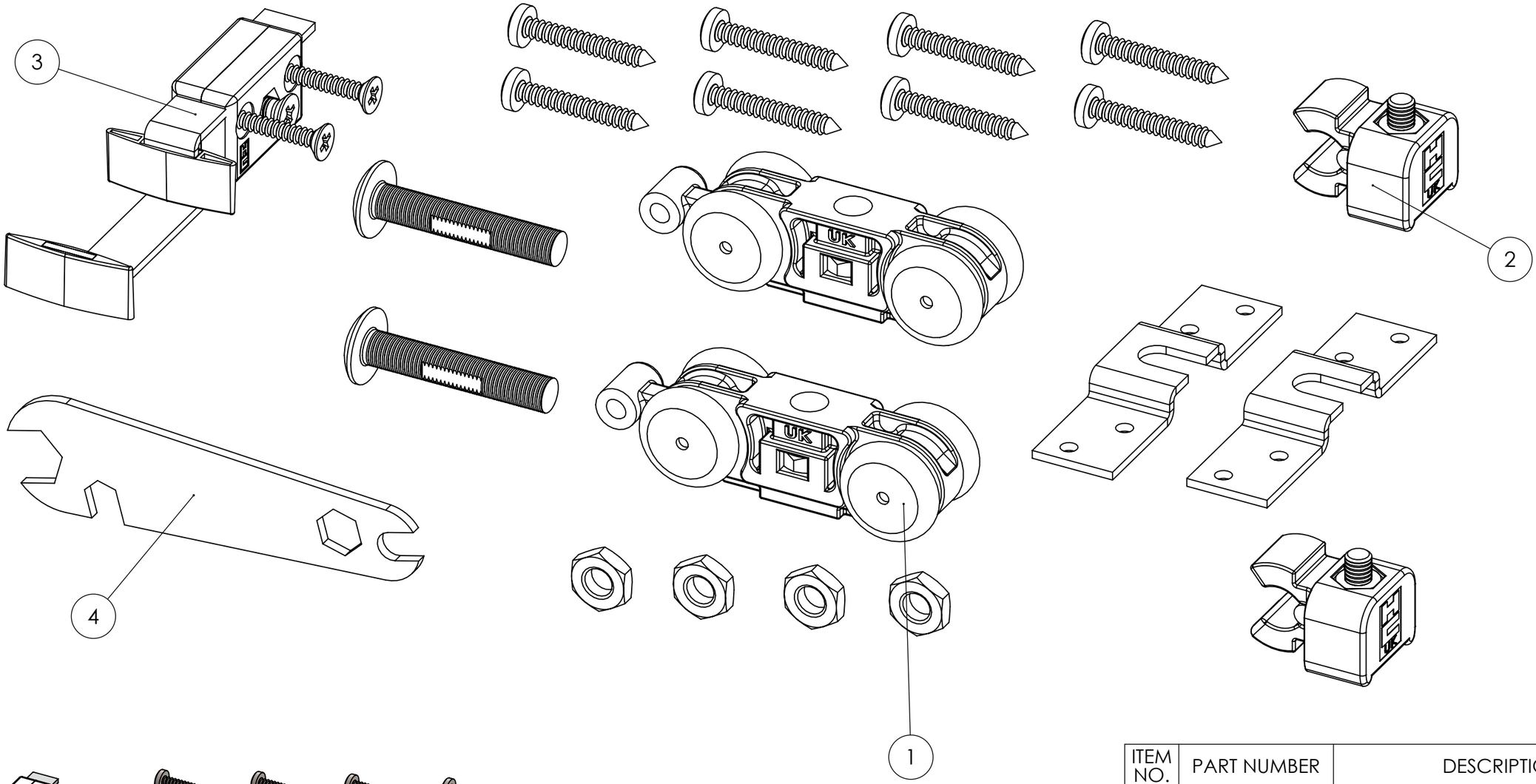

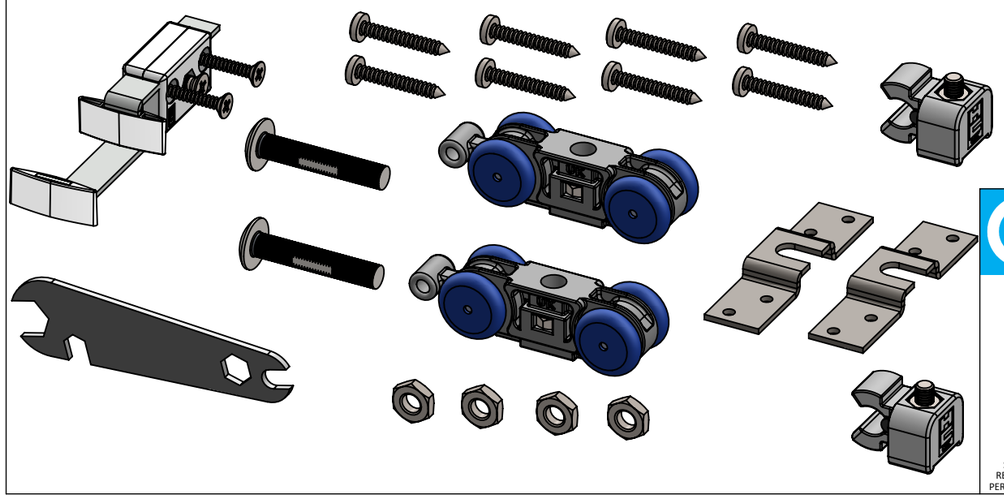

ITEM NO.	PART NUMBER	DESCRIPTION	QTY.
1	01207	HANGER PACK - Rev.01	1
2	01725.01	Track end piece - Rev.01	2
3	97780	Guide - Rev.05	1
4	11154.01	Spanner - Rev.04	1

COBURN SLIDING SYSTEMS

COBURN SLIDING SYSTEMS LIMITED
Unit 1, Cardinal way, Cardinal west,
Godmanchester, PE29 2XN, UK

TEL: +44 (0)20 8545 6680
FAX:+44 (0)20 8545 6720
E-Mail: sales@coburn.co.uk
Web: www.coburn.co.uk

© COPYRIGHT COBURN SLIDING SYSTEMS LIMITED

THE INFORMATION CONTAINED IN THIS DRAWING IS THE SOLE PROPERTY OF <COBURN SLIDING SYSTEMS LIMITED>. ANY REPRODUCTION IN PART OR AS A WHOLE WITHOUT THE WRITTEN PERMISSION OF <COBURN SLIDING SYSTEMS LIMITED> IS PROHIBITED.

MATERIAL

FINISH

UNLESS OTHERWISE SPECIFIED:

DIMENSION(mm)	*TOLERANCE*
ZERO PL DECIMAL	±0.2
ONE PL DECIMAL	±0.1
TWO PL DECIMAL	±0.05
ANGULAR TOLERANCE	±0.5°

FORGING TOLERANCE SEE BS 4114

ALL EDGES WILL BE ROUNDED WITH 0.2mm

DRAWN: Adrian Bogdan — DATE: 14/12/2016

CHECKED — DATE: -/-/-

DIMENSIONS ARE IN mm
DO NOT SCALE DRAWING

COMMENTS:
IF IN DOUBT ASK!

FILE DRG. No.: Final drawing product

TITLE:
STRAIGHTAWAY 100
ONE DOOR GEAR PACK

SIZE: A4 | DRG/PART. No.: 01208 | REV: 01

SCALE: NTS | WEIGHT: | SHEET: 1/1