2-245 TWO WHEEL HANGER CENTRE FOLDING

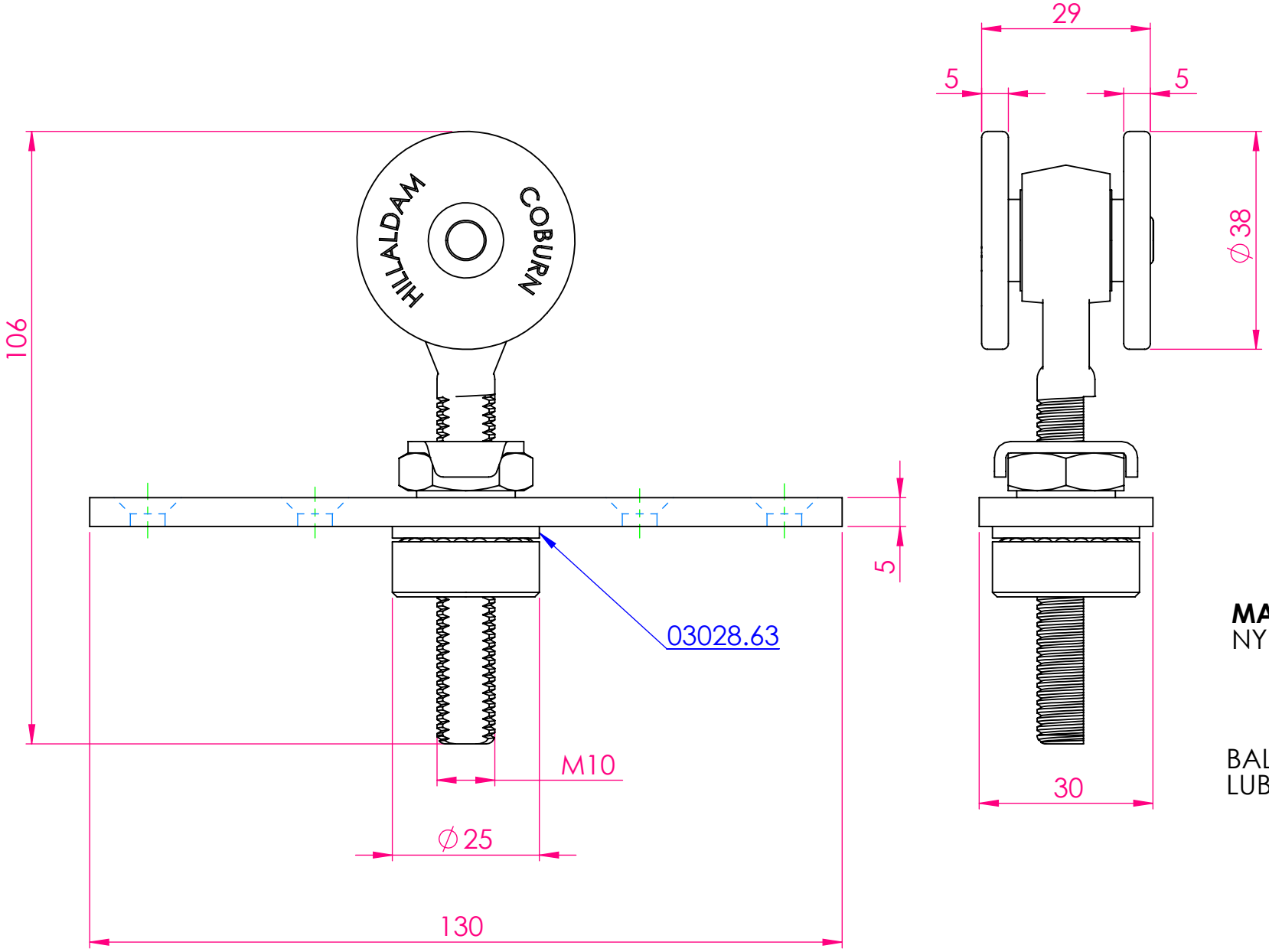

MATERIAL: STEEL WITH NYLON WHEEL

BALL BEARINGS PERMANENTLY LUBRICATED