4-201 TIMBER DOOR HANGER
STRAIGHTAWAY 430 & 438 SERIES
SCALE 1:2

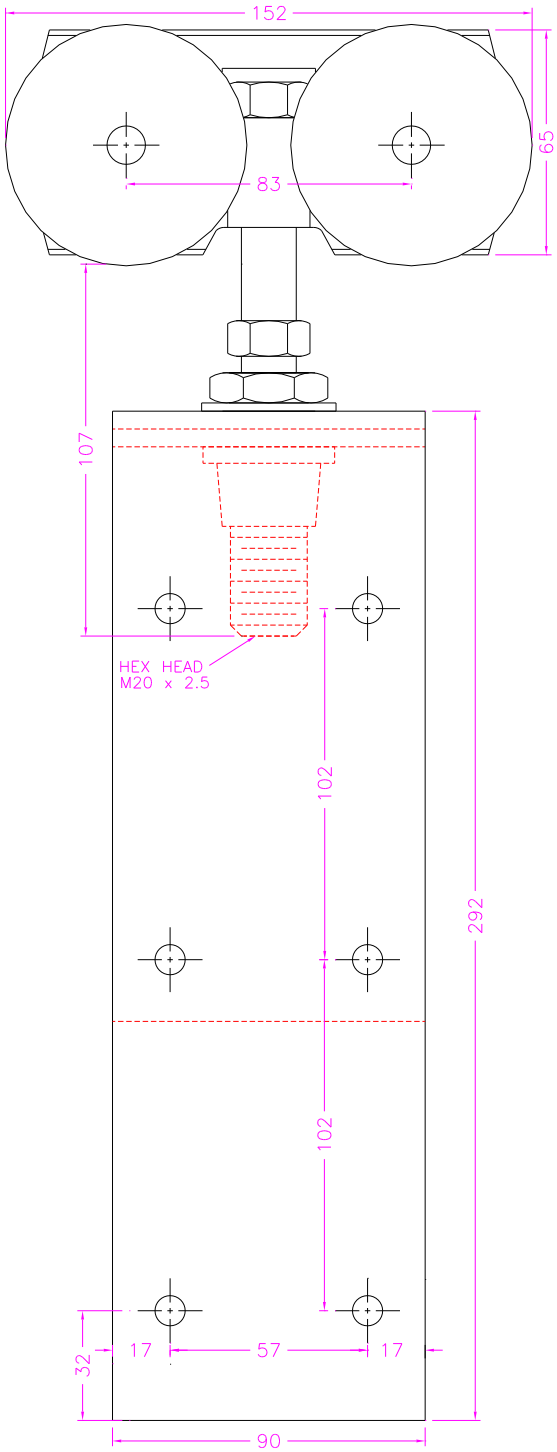

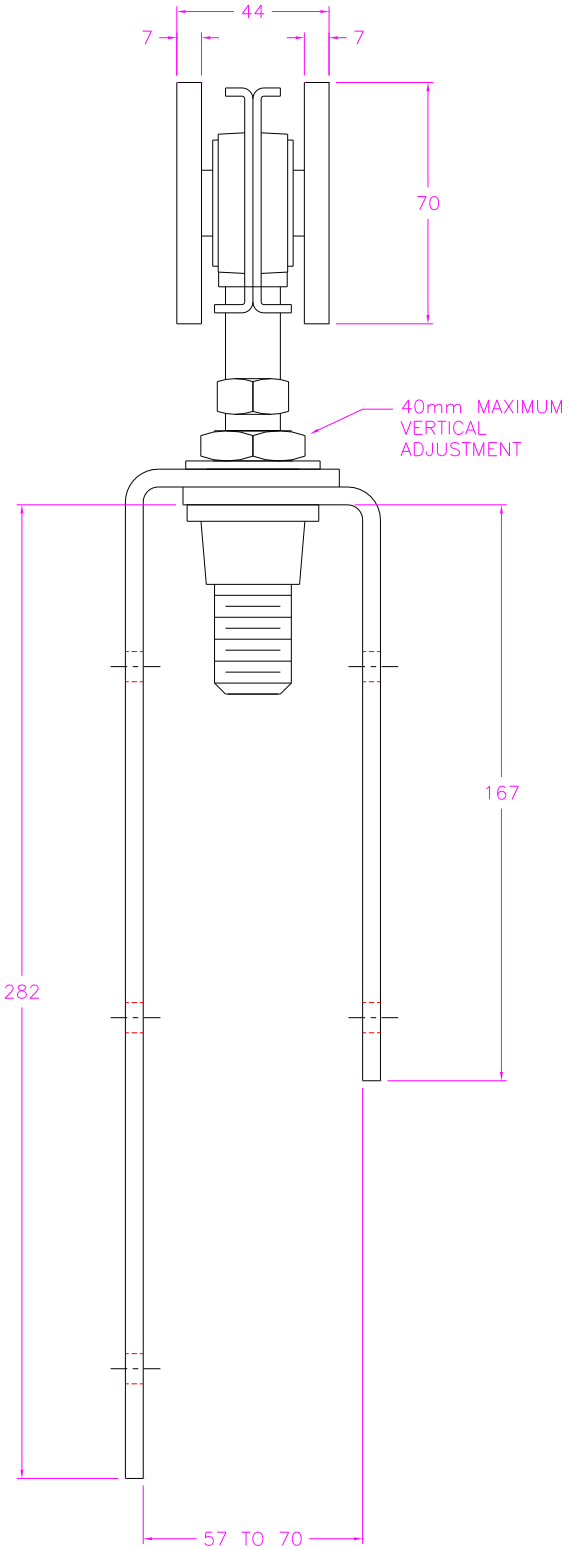

MATERIAL: ALL STEEL
BALL BEARINGS PERMANENTLY LUBRICATED.