OBS: Track, guide and end caps must be in anodized aluminium finish

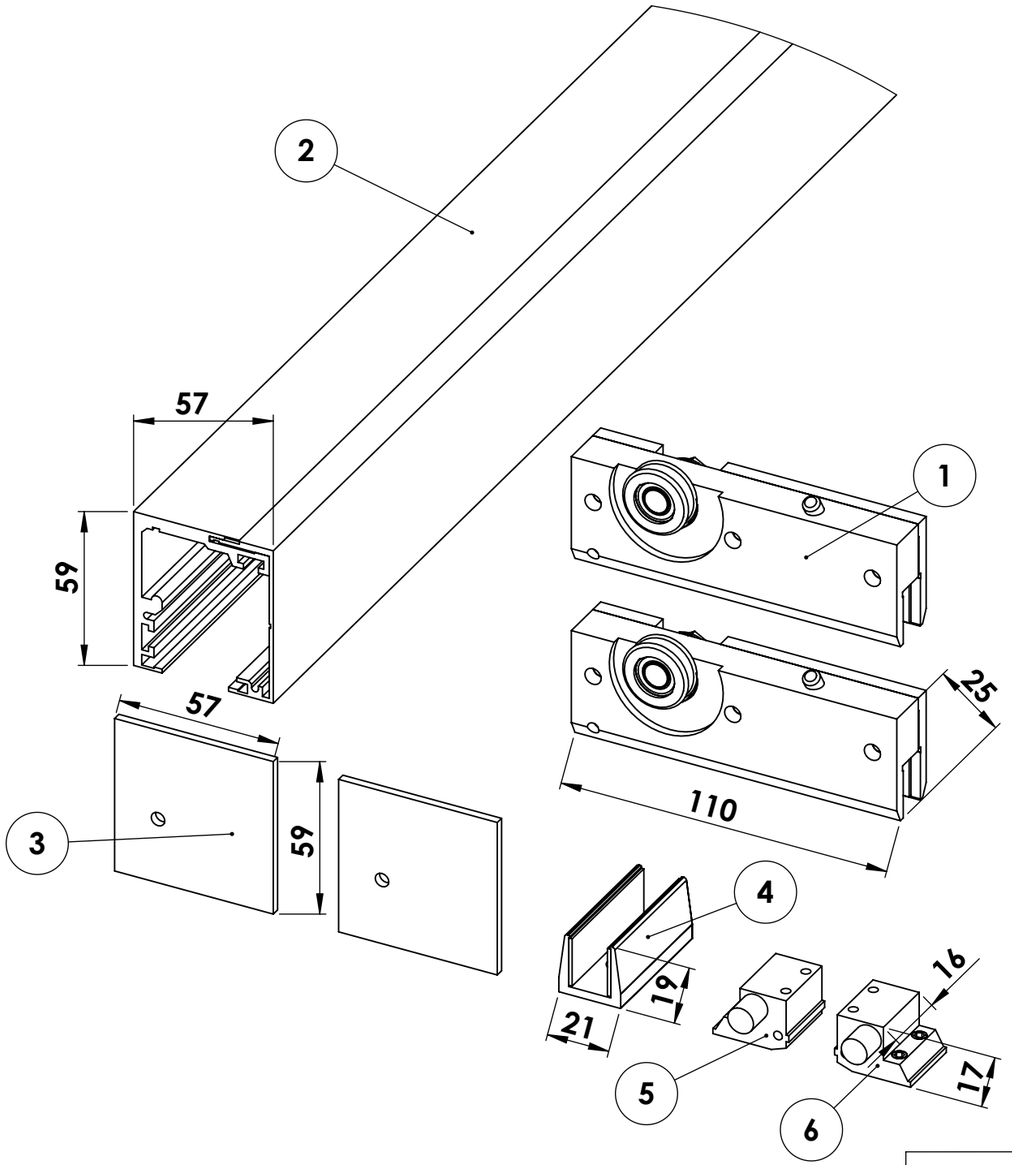

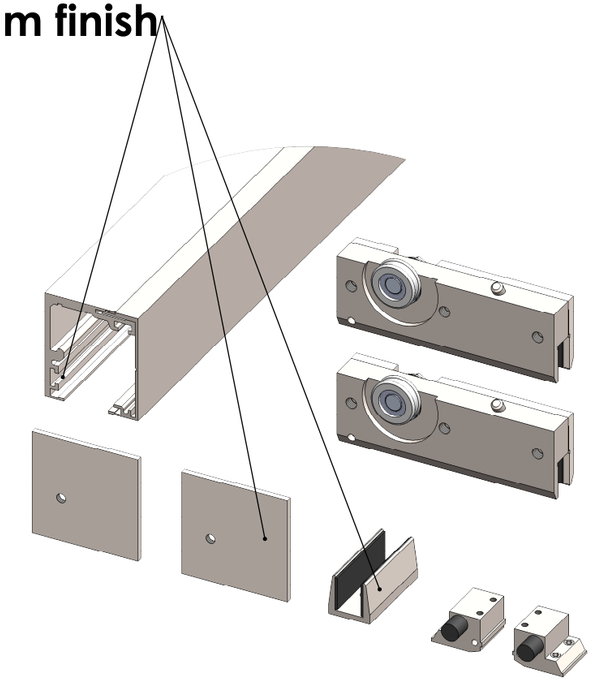

OBS: Track lenght = 2000mm

ITEM NO.	PART NUMBER	DESCRIPTION	QTY.
1		Hanger	2
2		Track, L=2000mm	1
3		End cap	2
4		Bottom guide	1
5		Left side stopper	1
6		Right side stopper	1

COBURN SLIDING SYSTEMS

HILLALDAM COBURN LTD
Unit 1, Cardinal way, Cardinal west,
Godmanchester, PE29 2XN
UK
TEL: +44 (01)4 8027 9967 FAX:+44 (02)0 8545 6723
E-Mail:sales@hillaldam.co.uk
Web:www.coburn.co.uk

© COPYRIGHT HILLALDAM COBURN LTD

THE INFORMATION CONTAINED IN THISDRAWING IS THE SOLE PROPERTY OF <HILLALDAM COBURN LTD>. ANY REPRODUCTION IN PART OR AS A WHOLE WITHOUT THE WRITTEN PERMISSION OF <HILLALDAM COBURN LTD> IS PROHIBITED.

MATERIAL

FINISH

UNLESS OTHERWISE SPECIFIED:

DIMENSION(mm)	TOLERANCE
ZERO PL DECIMAL	±0.2
ONE PL DECIMAL	±0.1
TWO PL DECIMAL	±0.05
ANGULAR TOLERANCE	±0.5°

FORGING TOLERANCE SEE BS 4114

ALL EDGES WILL BE ROUNDED WITH 0.2mm

DRAWN: Adrian Bogdan — DATE: 21/06/2015

CHECKED — DATE: -/-/-

DIMENSIONS ARE IN mm

DO NOT SCALE DRAWING

COMMENTS:

IF IN DOUBT ASK!

FILE DRG. No. Final Product Drawing

TITLE: **Flexiglas 50 Standard kit**

SIZE: A4 | DRG/PART. No. **51181** | REV 01

SCALE: NTS | WEIGHT: | SHEET: 1/1