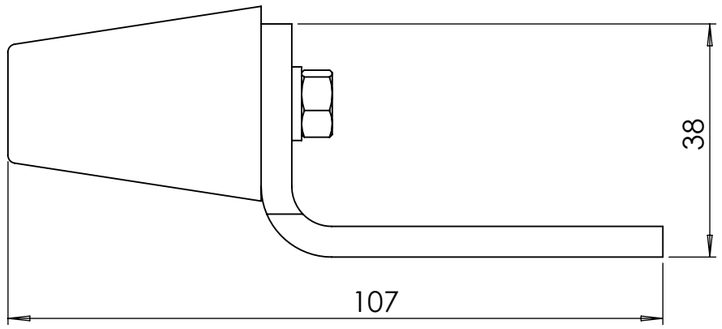

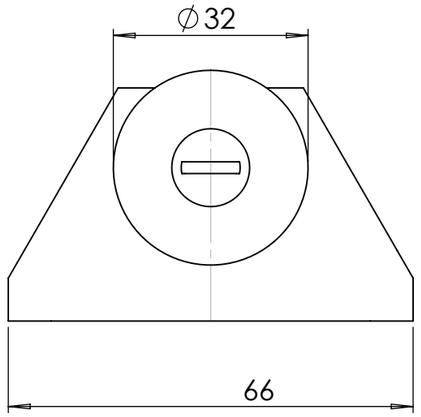

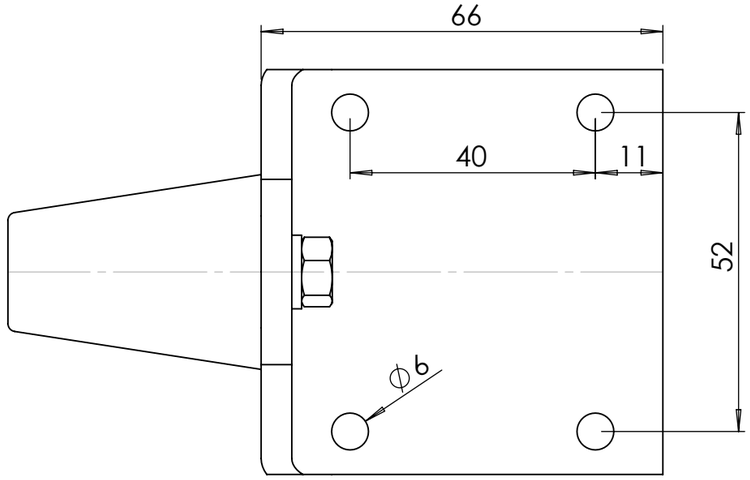

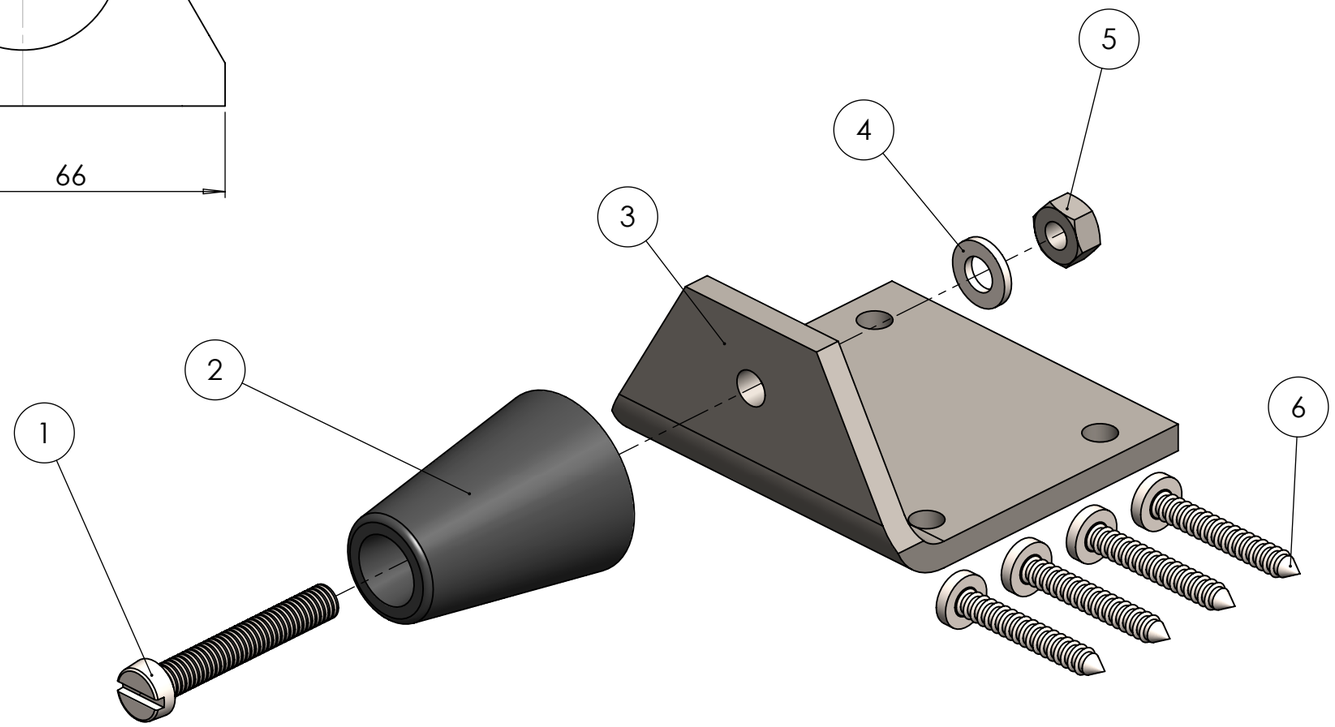

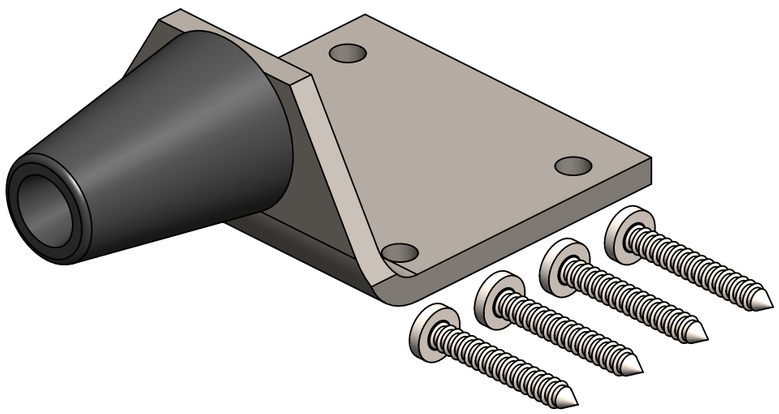

ITEM NO.	PART NUMBER	DESCRIPTION	QTY.
1	03014.244	AS-NZS 1427 CH - M6 x 40-S	1
2	97722.01	RUBBER BUFFER	1
3	11155.44	Door stop - Body - Rev.01	1
4	03028.14	Washer DIN 125 - A 6.4	1
5	03024.206	Metric nut, stainless steel - Rev.01	1
6	03002.44	AS-NZS 4406-ST4.8x32-C-H-S	4

COBURN SLIDING SYSTEMS LIMITED

Unit 1, Cardinal west,
Godmanchester, PE29 2XN
United Kingdom

TEL: +44 (0)20 8545 6680
FAX:+44 (0)20 8545 6720
E-Mail: sales@coburn.co.uk
Web: www.coburn.co.uk

© COPYRIGHT COBURN SLIDING SYSTEMS LIMITED
THE INFORMATION CONTAINED IN THIS DRAWING IS THE SOLE PROPERTY OF <COBURN SLIDING SYSTEMS LIMITED>. ANY REPRODUCTION IN PART OR AS A WHOLE WITHOUT THE WRITTEN PERMISSION OF <COBURN SLIDING SYSTEMS LIMITED> IS PROHIBITED.

UNLESS OTHERWISE SPECIFIED:

DIMENSION(mm)	*TOLERANCE*
ZERO PL DECIMAL	±0.2
ONE PL DECIMAL	±0.1
TWO PL DECIMAL	±0.05
ANGULAR TOLERANCE	±0.5°

FORGING TOLERANCE SEE BS EN 10243

ALL EDGES WILL BE ROUNDED WITH 0.2mm

COMMENTS: IF IN DOUBT ASK!

MATERIAL: STAINLESS STEEL

FINISH:

FIRST ANGLE PROJECTION

DRAWN by: **Adrian BOGDAN**
DATE: **31/07/2017**

CHECKED by: -
DATE: -

DRAWING TYPE: Final part drawing

TITLE: DOOR STOP

SIZE: A3 | DWG NO.: 97420 | REV.: 01

SCALE: 1:1 | WEIGHT: | SHEET 1 / 1